2024-2025 Fall Semester
MKT1111 Computer Aided Design
Homework 3

Pulley

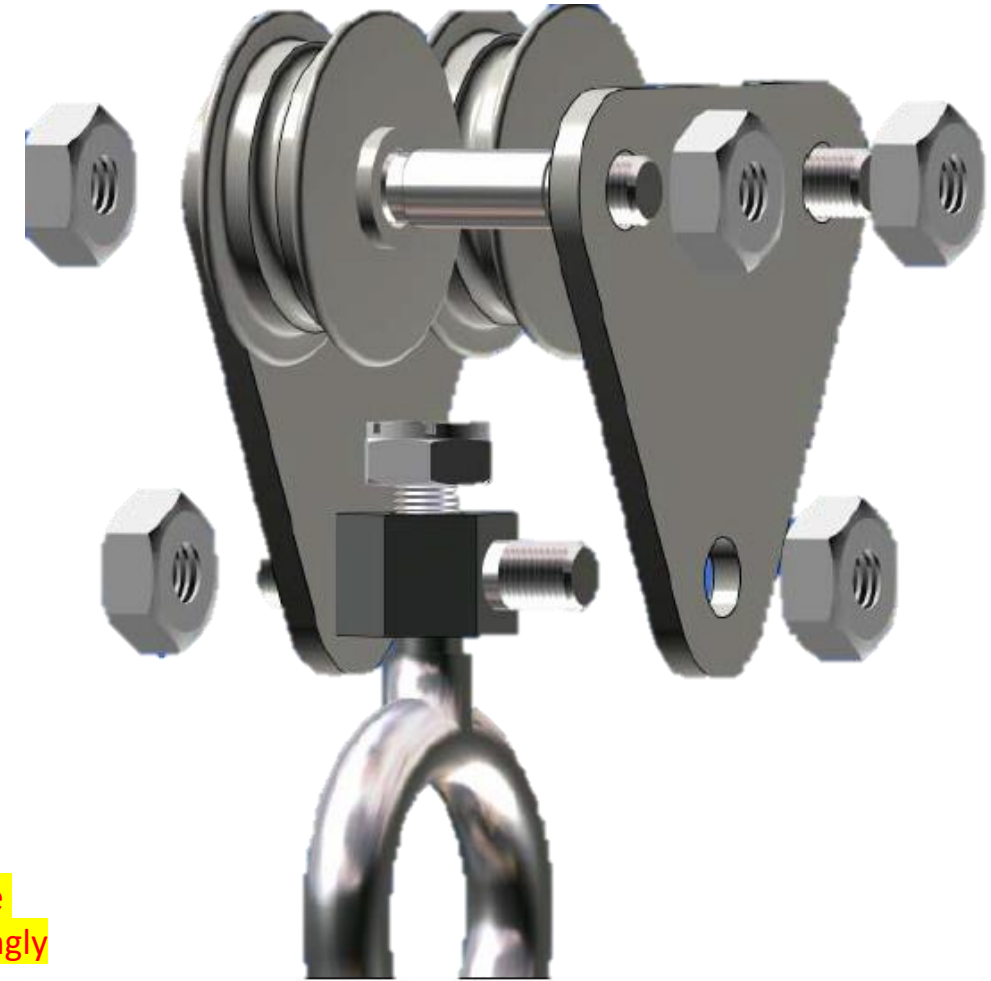

- TASKS and Requested Files
  - **ALL 3D Solid Parts** created and used in the assembly (*.SLDPRT)
    - Sketches must be **fully defined**
  - **SINGLE** 3D Assembly Model (*.SLDASM)
    - Mechanical mates on screws are required.
  - **SINGLE** 2D Technical Drawing file (*.SLDDRW) including:
    1. Necessary views of all parts with dimensions
       - Use section view, where it is necessary
    2. **Exploded view is** requested for the assembly model.
    3. Balloon numbering by rules.
    4. Bill of materials (part names must be correct, standard numbers must be shown in a separate column).
- **Submission format:** All files will be in ONE SINGLE compressed file (ZIP or RAR file)
- **Folder name should look like inside compressed file as:**

"H3_Surname_NameInitials_StudentNo“

Note: You can choose any standard paper size that can contain all of your drawings. However, make sure that there are NOT large gaps within the drawing paper. So, decide on your paper size accordingly

NOTE: Choose appropriate values for missing/incorrect dimensions to create a decent assembly and visually similar parts shown with the drawings.

1. Sheet Metal Part

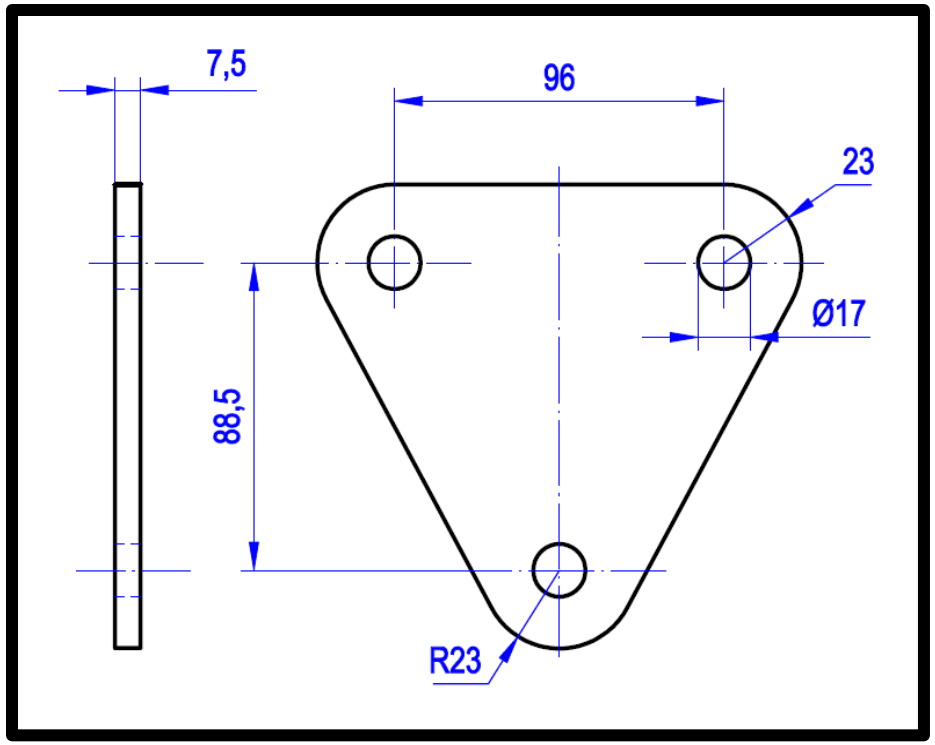

2. Reel (x2)

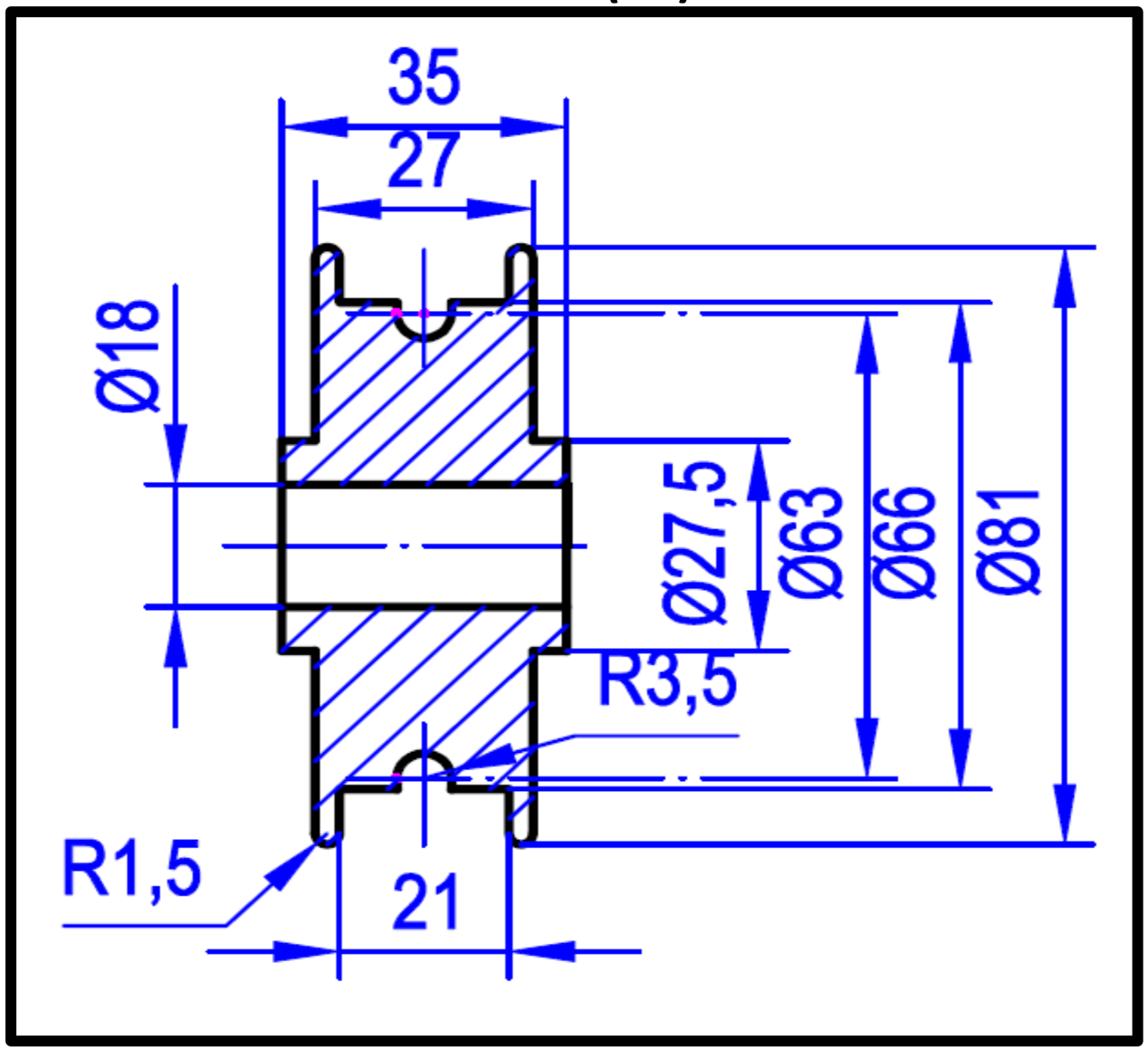

3. Stud (x2)

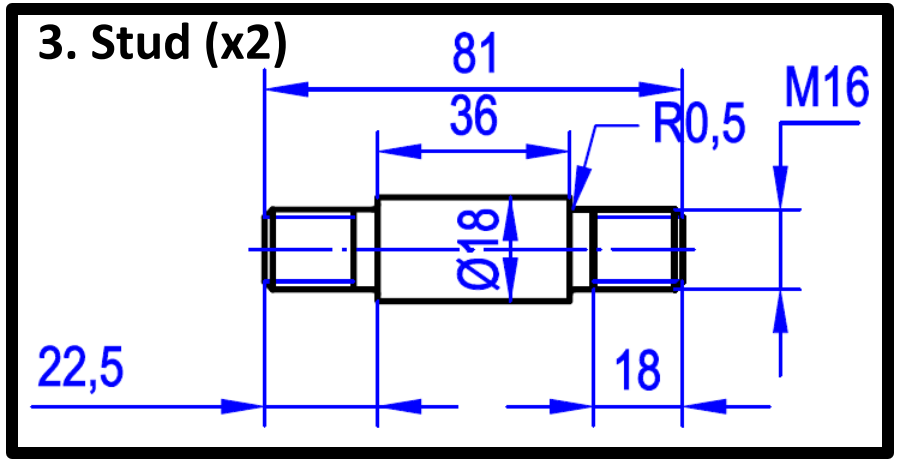

NOTE: **Choose appropriate values for missing/incorrect dimensions** to create a decent assembly and visually similar parts shown with the drawings.

5. Hook Holder

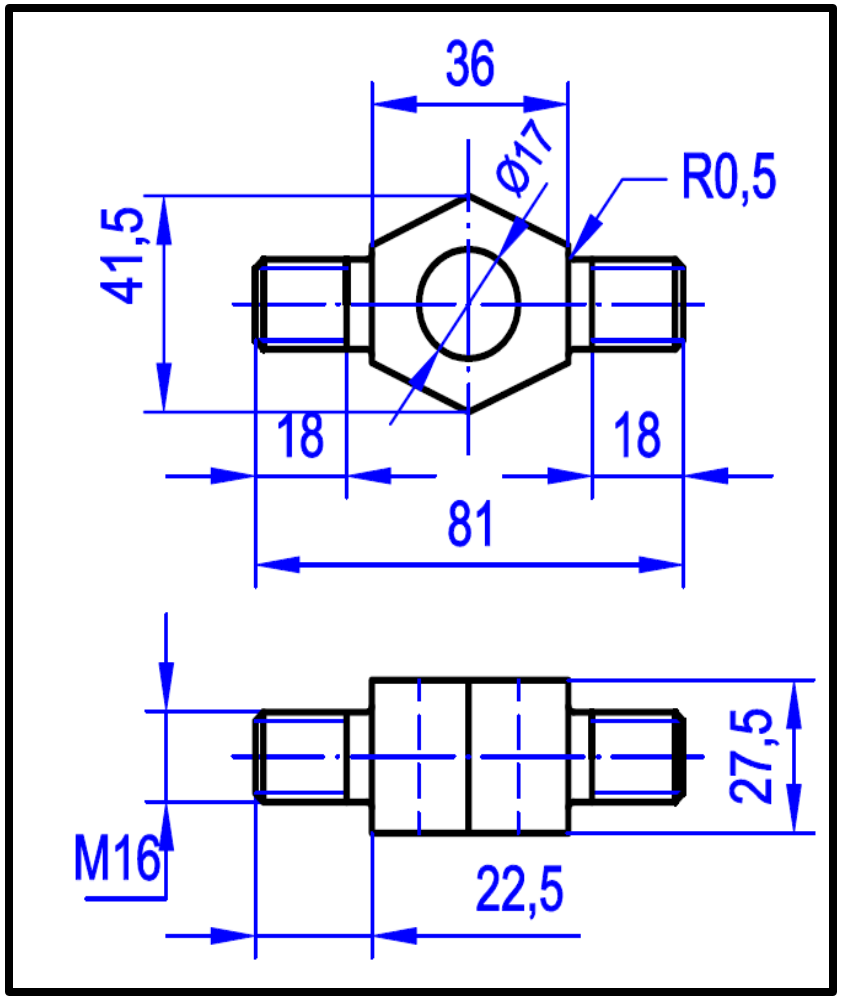

6. Round Hook

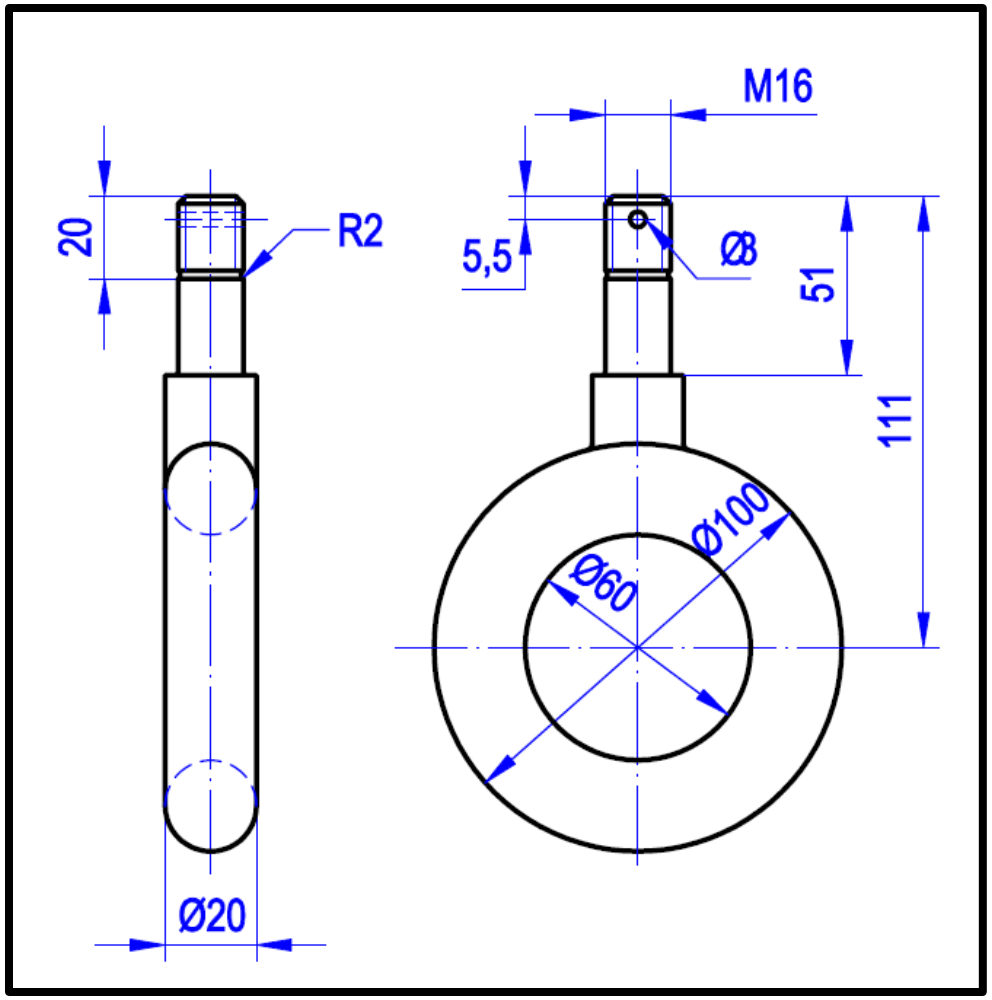

4. M16 Hexagon Nut (x6)
7. Washer (Size 16)
9. Pin B 3x30

Choose any suitable machine element from tool library

8. M16 Hex Slotted

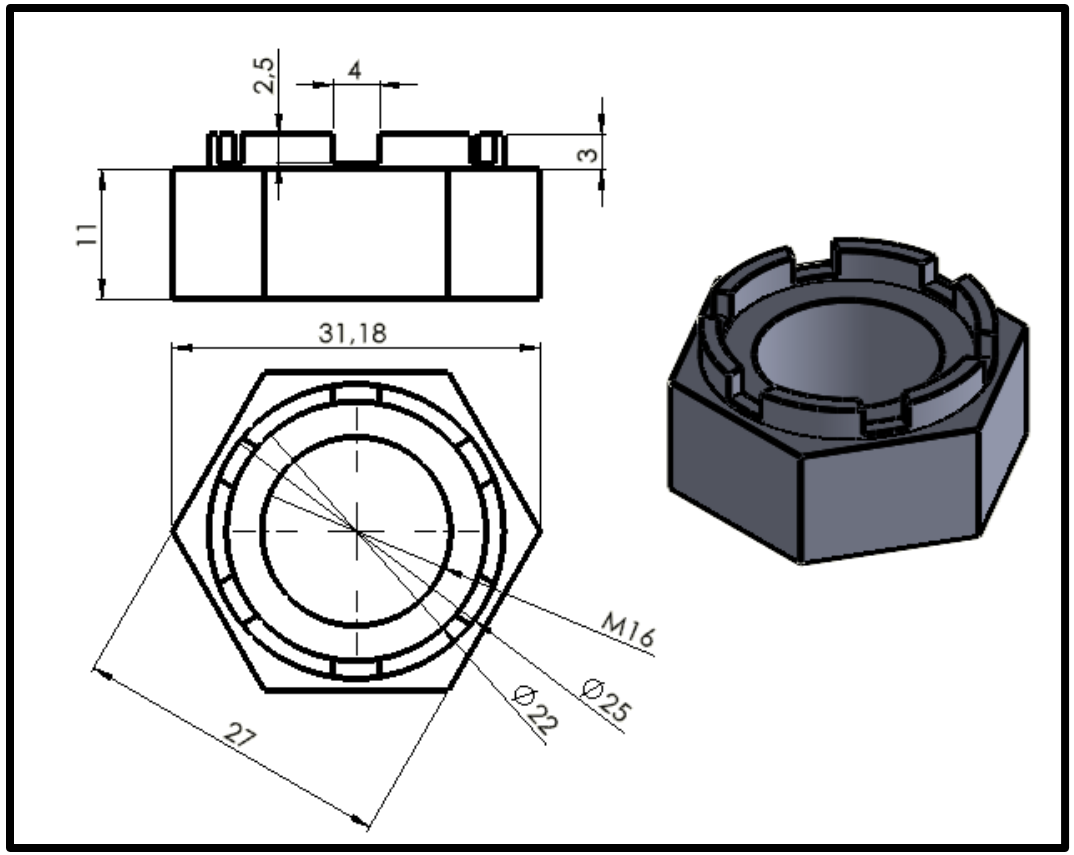

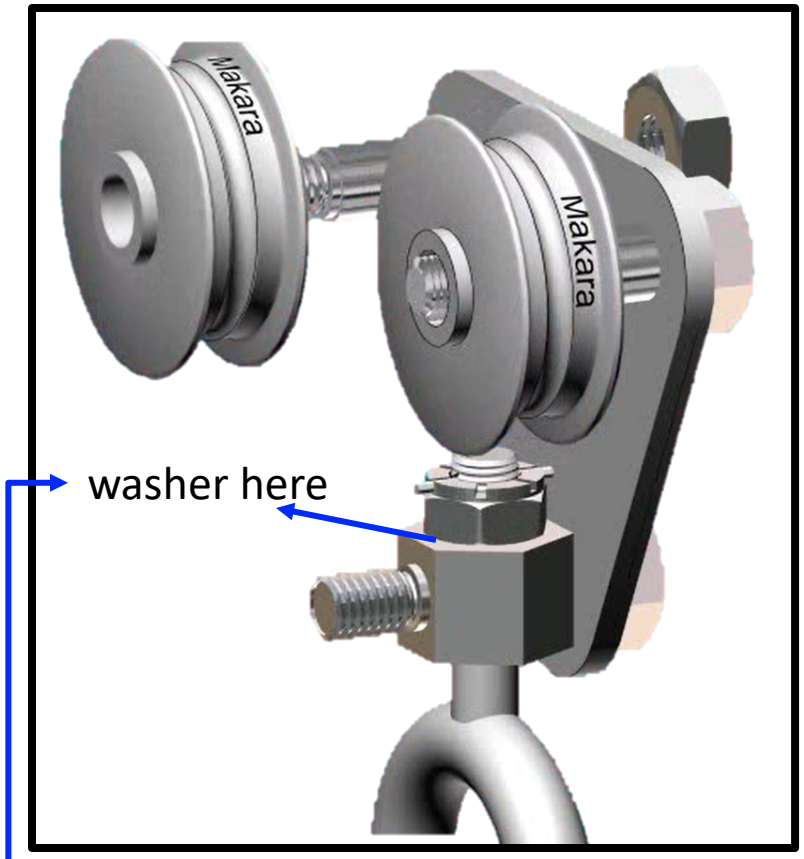

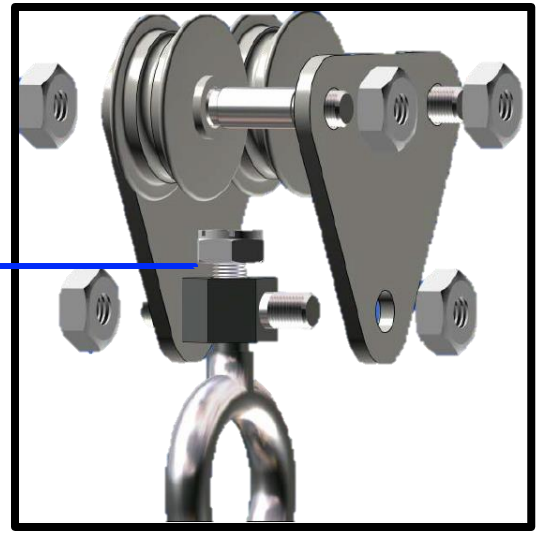

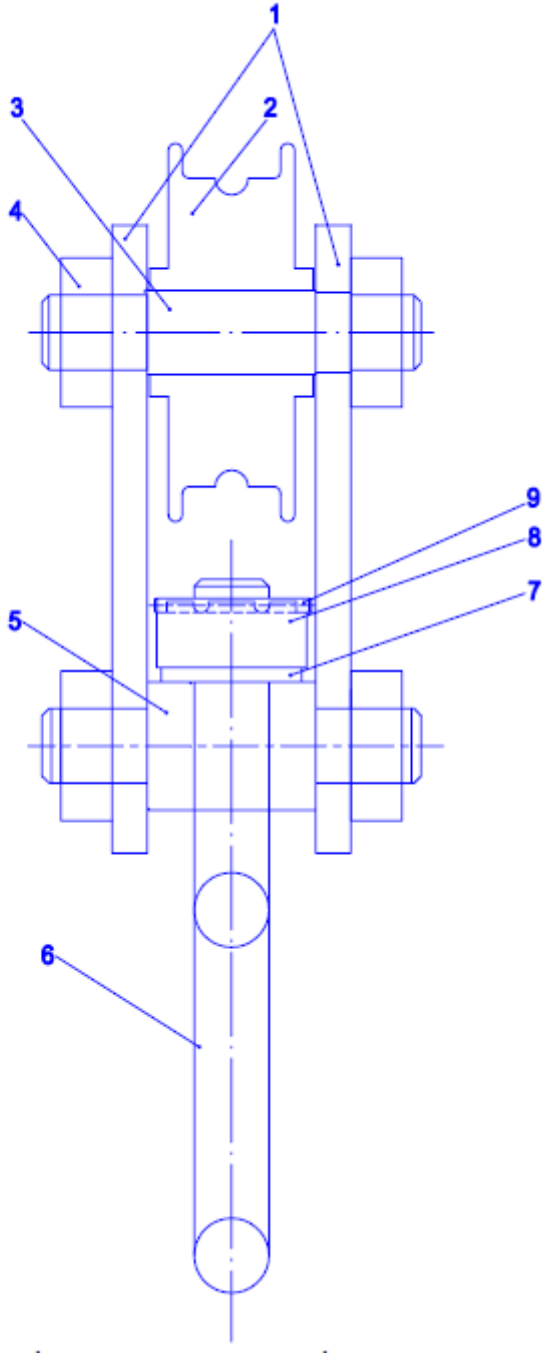

NOTE: **Choose appropriate values for missing/incorrect dimensions** to create a decent assembly and visually similar parts shown with the drawings.